Lab 10

A Digital Lock

Objective: Build an electronic combination lock with reset button, two number buttons (0 and 1), and an unlock output. The combination should be "01011"

Block Diagram: A combinational digital lock has three input buttons for Reset, entering a "0" and entering a "1" and output button UNLOCK and state which shows in which state the machine is currently in. The state output is connected to the seven segment display on the S6BOARD. The Module button in the below diagram is an abstraction of the synchronizer and level to pulse converter from the previous lab. The state transition diagram is given in the following figures.

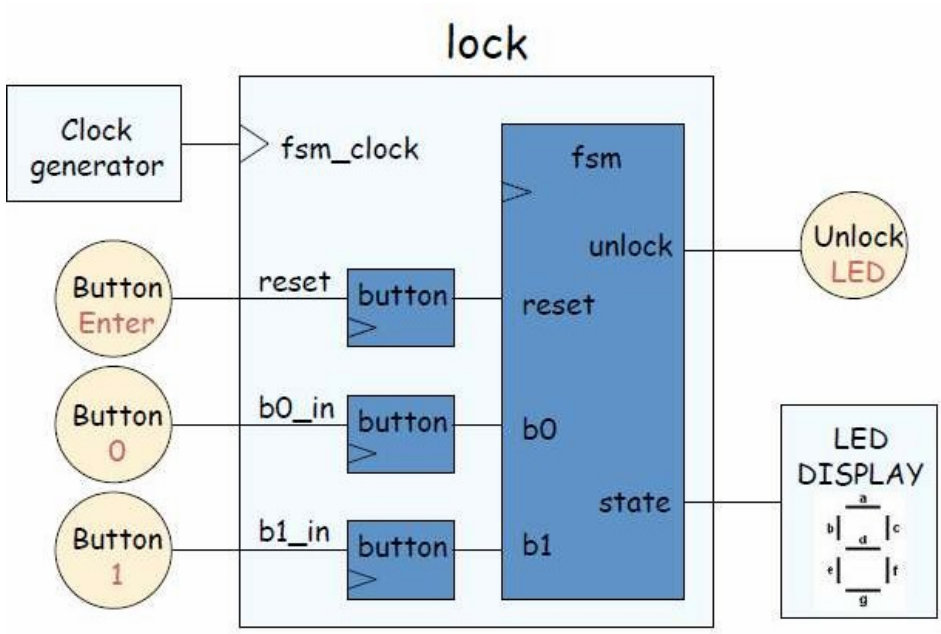

State Transition Diagram:

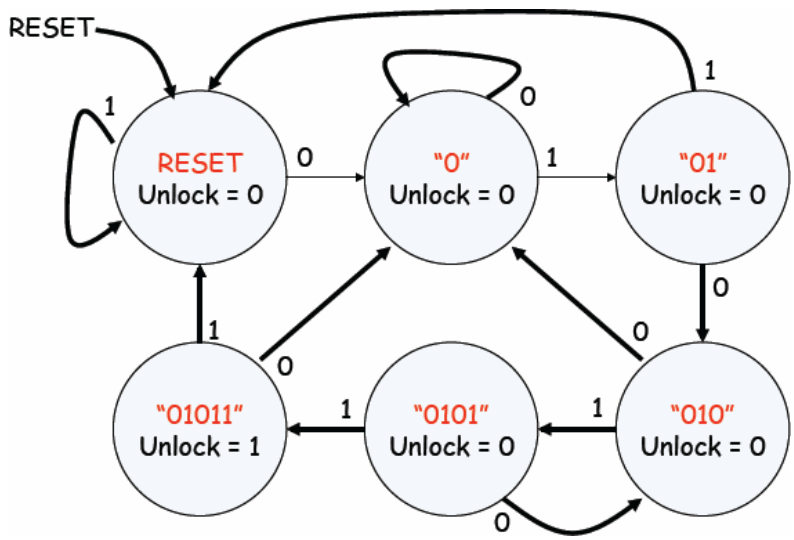

Lab Tasks:

1- Change the functionality of the lock such that it unlocks on the sequence of 11011.